EN

TRM138

8-channel on-off controller

User guide

TRM138_2016.12_0218_EN

akYtec GmbH · Vahrenwalder Str. 269 A · 30179 Hannover · Germany · Tel.: +49 (0) 511 16 59 672-0 ·www.akytec.de

Contents

1 Overview

This guide describes the functions, system configuration, operating instructions, programming and troubleshooting of the 8-channel on-off controller TRM138 (hereinafter referred to as TRM138, device, or controller).

1.1 Functions

The 8-channel on-off controller TRM138 is intended for automatic control systems in various technological processes in different areas of industry, agriculture and utilities.

The controller provides following basic functions:

- measuring of input values and transformation of the input signal according to the sensor type
- displaying the measured values and configuration parameters on 4-digit LED displays
- digital filtering of the input signal (EMI-interference protection)
- signal correction
- creating an alarm signal in case of sensor failure, displaying the cause of the failure, using the outputs for alarm signals
- creating control signals for actuating devices according to configuration parameters
- manual control, creating control signals using the function keys
- full control over PC using RS485 interface
- operating with akYtec, Modbus-RTU and Modbus-ASCII protocols in a Slave mode
- saving the set programmable parameters to non-volatile memory in case of power outage
- configuration via PC or using the function keys.

1.2 RS485 network

The TRM138 uses the common standard RS485 for data exchange.

Serial interface RS485 enables communication via two-wired line in half-duplex mode. The module supports the Modbus RTU, Modbus ASCII and akYtec protocols with automatic protocol detection.

The network consists of a Master device and can contain up to 32 Slave devices. Maximum length is 1200 m. The number of Slave devices and network length can be increased using RS485 interface repeater.

Devices are connected to a network according to linear (bus) topology. It means that the line goes from the first device to the second one, from the second one to the third one, etc. Star connection and spur lines are not allowed.

Line reflections always occur at each of the 2 ends of the bus (the first and the last node). The higher the data transmission rate, the stronger they are. A terminating resistor is needed to minimize reflections. Line termination may be a 150 ohms value (0.5 W) resistor.

The TRM138 can be used as a Slave device only. Master device can be PLC, computer with SCADA software or control panel.

1.3 Ordering information

The TRM138 can be ordered in different variants depending on the required output type:

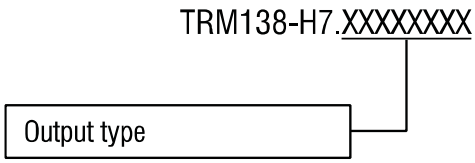

Output type (1…8):

R Relay

I 4-20 mA

S Solid state relay

T NPN transistor

U 0-10 V (outputs 5…8 only)

Various types of outputs should be indicated in the order key only in the certain sequence:
I -> S -> T -> R -> U

Example:

TRM138-H7.UUIISSTR	incorrect
TRM138-H7.IISTRRUU	**Correct**
TRM138-H7.RRRRRRRR	**Correct**

2 Specifications

Table 2.1 General specifications

Power supply		230 (90…264) V AC, (47…63 Hz)
Power consumption, max.		18 VA
Analog Inputs		8
Optional outputs		8
Sampling time (per input), max.		0.6 s
Integrated voltage source		24±3 V DC, 150 mA
RS485 interface	Terminals	D+, D-
	Protocols	Modbus RTU/ASCII, akYtec
	Baud rate	2.4…115.2 kbit/s
Dimensions	H7	169 x 144 x 50.5 mm
Weight		approx. 450 g

Table 2.2 Standard input signals

Signal type	Measurement range (%)	Accuracy, %
0-1 V	0…100	±0.25
-50…+50 mV	0…100	
0-5 mA	0…100	
0-20 mA	0…100	
4-20 mA	0…100	

Table 2.3 Temperature sensors

Signal type	Measurement range, °C	Temperature coefficient, °C^{-1}	Accuracy, %
RTD according to IEC 60751:2008			
Pt50	–200…+750	0.00385	±0.25
Pt100	–200…+750		
RTD according to GOST 6651			
50P	-200...+750	0.00391	±0.25
50M	-190…+200	0.00428	
53M	-50…+200	0.00426	
Cu50	-50…+200	0.00426	
100P	-200...+750	0.00391	
100M	-190…+200	0.00428	
Cu100	-50…+200	0.00426	
TC according to IEC 60584-1:2013			
J	-200…+1200	-	±0.5 (±0.25)*
N	-200…+1300	-	
K	-200…+1300	-	
S	0…+1750	-	
R	0…+1750	-	
A	0…+2500	-	
TC according to GOST 8.585			
L	-200…+800	-	±0.5 (±0.25)*

** with disabled cold junction compensation*

Table 2.4 Output types

Ordering code	Output type	Loading capacity
R	Relay	4 A / 250 V AC 4 A / 30 V DC
T	NPN transistor	400 mA, 60 V DC
S	Solid state relay	50 mA, 4…6 V DC
I	Analog 4-20 mA	10…30 V, max. 1.3 kohm
U	Analog 0-10 V	15…30 V, min 2 kohm

2.1 Environmental conditions

The device is designed for natural convection cooling. It should be taken into account when choosing the installation site.

The following environment conditions must be met:

- clean, dry and controlled environment, low dust level
- closed non-hazardous areas, free of corrosive or flammable gases

Table 2.5

Conditions	Permissible range
Ambient temperature	+1…+50°C
Storage temperature	-25…+60°C
Relative humidity	up to 80% (at +25°C, non-condensing)
IP Code	IP54 front
Altitude	up to 2000 m above sea level

3 Safety

Explanation of the symbols and keywords used:

⚠ **DANGER**

DANGER indicates an imminently hazardous situation which, if not avoided, will result in death or serious injury.

⚠ **WARNING**

WARNING indicates a potentially hazardous situation which, if not avoided, could result in death or serious injury.

⚠ **CAUTION**

CAUTION indicates a potentially hazardous situation which, if not avoided, could result in minor or moderate injury

▶ **NOTICE**

NOTICE indicates a potentially harmful situation which, if not avoided, may result in damage of the product itself or of adjacent objects.

3.1 Intended use

The device has been designed and built solely for the intended use described in this guide, and may only be used accordingly. The technical specifications contained in this guide must be observed.

The device may be operated only in properly installed condition.

Improper use

Any other use is considered improper. Especially to note:

- This device should not be used for medical devices which receive, control or otherwise affect human life or physical health.
- The device should not be used in an explosive environment.
- The device should not be used in an atmosphere with chemically active substance.

4 Installation

⚠ CAUTION

Improper installation
Improper installation can cause serious or minor injuries and damage the control panel. Installation must be performed only by fully qualified personnel.

The device is designed in a plastic enclosure for panel mounting. For the dimension drawings see Appendix A.

4.1 Requirements

- Install the device in a cabinet with clean, dry and controlled environment. For further details see 2.1.
- The module is designed for natural convection cooling. It should be taken into account when choosing the installation site.
- The seal contact surface must be clean and smooth, so that the protection IP54 can be provided.
- The device can be placed at any angle.

4.2 Mounting

- prepare the mounting cutout according to Fig. A.1
- make sure that the device is provided with the mounting seal
- fit the device into the cutout
- insert the 4 fastening clips into the slots on the top and the bottom of the device
- insert the screws and tighten them to fix the device

4.3 Wiring

⚠ DANGER

Dangerous voltage
Electric shock could kill or seriously injure.
All electrical connections must be performed by a fully qualified electrician.
Ensure that the mains voltage matches the voltage marked on the nameplate.
Ensure that the device is provided with its own power supply line and electric fuse.

⚠ WARNING

Switch on the power supply only after wiring of the device has been completed.

- The layout of the terminal blocks is shown in Fig. 4.1 and the terminal assignments in Table 4.1.
- Ensure that the device is provided with its own power supply line and electric fuse I = 1 A.
- Connect the power supply to the terminals L / N.
- The inputs should be wired in accordance with Fig. 4.2...4.8.
- The outputs should be wired in accordance with Fig. 4.9...4.17.
- The maximum conductor cross-section is 1.5 mm².
- Disabled inputs (parameter „Sensor type“ = OFF) should be short-circuited according to Fig. 4.7.

▶ NOTICE

Signal cables should be routed separately or screened from the supply cables. Only a shielded cable may be used for signal lines.

NOTICE

The integrated voltage source 24 V DC can be used for inputs or outputs, but not for both groups.

- Connect the RS485 lines to terminals D+ and D-.
- For the connection to RS485 interface twisted pair cable should be used. Maximal cable length is 1200 m.

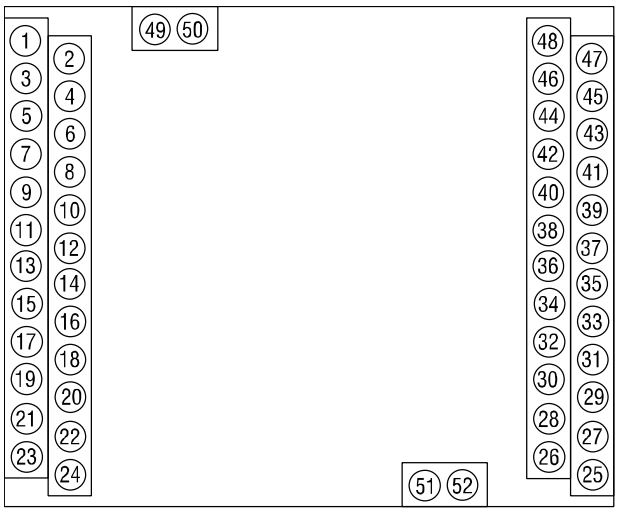

Fig. 4.1 Layout of terminal blocks

Table 4.1 Terminal assignment

Terminal	Signal	Terminal	Signal	Terminal	Signal
1	Output 1-3 (–)	19	Output 8-2 (+)	37	Input 4-3
2	Output 1-2 (+)	20	Output 8-1	38	Input 3-3
3	Output 2-3 (–)	21	not connected	39	Input 4-2
4	Output 2-2 (+)	22	not connected	40	Input 3-2
5	Output 3-3 (–)	23	Power supply (N)	41	Input 4-1
6	Output 3-2 (+)	24	Power supply (L)	42	Input 3-1
7	Output 4-3 (–)	25	Input 8-3	43	Input 2-3
8	Output 4-2 (+)	26	Input 7-3	44	Input 1-3
9	Output 5-3 (–)	27	Input 8-2	45	Input 2-2
10	Output 5-2 (+)	28	Input 7-2	46	Input 1-2
11	Output 5-1	29	Input 8-1	47	Input 2-1
12	Output 6-3 (–)	30	Input 7-1	48	Input 1-1
13	Output 6-2 (+)	31	Input 6-3	49	RS485 D+
14	Output 6-1	32	Input 5-3	50	RS485 D-
15	Output 7-3 (–)	33	Input 6-2	51	–24 V voltage source
16	Output 7-2 (+)	34	Input 5-2	52	+24 V voltage source
17	Output 7-1	35	Input 6-1		
18	Output 8-3 (–)	36	Input 5-1		

4.4 Inputs

Supported signals (see Table 2.2 and 2.3):

- Standard signal 4-20 mA / 0-1 V
- Thermocouple (TC)
- Resistance thermometer (RTD)

Table 4.2 Sensor cables

Sensor type	Cable length, max	Resistance (per wire), max	Cable type
RTD	100 m	15 ohm	Equal length and cross-section, (2- or 3-wire)
TC	20 m		Compensation cable
Standard signal (current or voltage)	100 m	100 ohm	2-wire

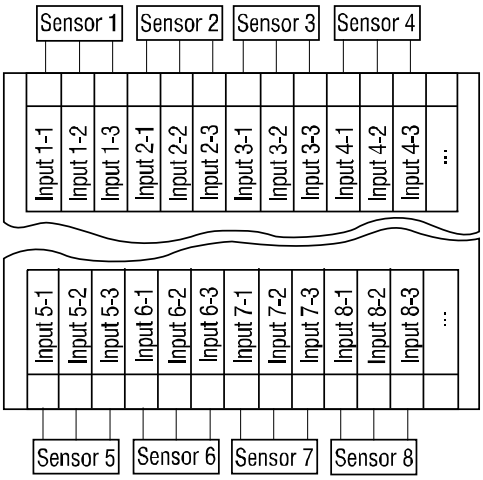

Fig. 4.2 Input connections

4.4.1 Current / voltage signals

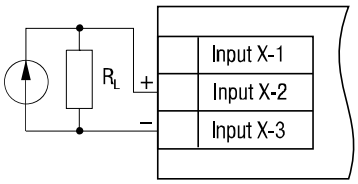

Fig. 4.3 4-20 mA sensor wiring

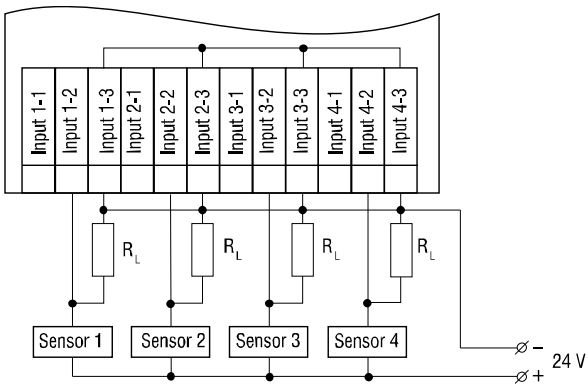

Fig. 4.4 4-20 mA sensor group wiring (example)

▶ **NOTICE**

To measure a current signal a shunt resistor R_L = 100 ohm (±1%) should be connected in parallel.

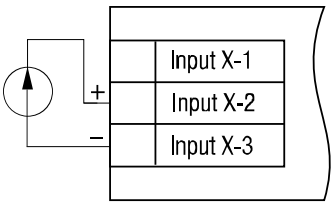

Fig. 4.5 0-1 V sensor wiring

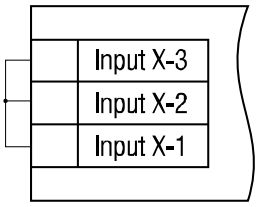

Fig. 4.6 Short-circuiting of a disabled input

4.4.2 Resistance thermometer (RTD)

Two- or three-wire sensors can be connected.

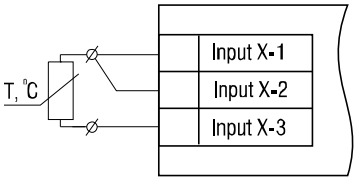

Fig. 4.7 RTD sensor wiring

4.4.3 Thermocouples (TC)

Optional cold junction compensation (CJC) is provided.

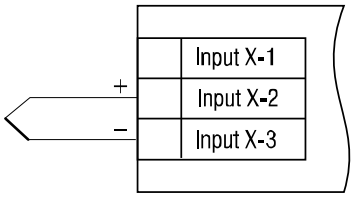

Fig. 4.8 TC sensor wiring

4.5 Outputs

Optional outputs (see Table 2.4):

- Relay
- NPN transistor
- Solid state relay
- Analog 4-20 mA
- Analog 0-10 V

4.5.1 Relay outputs (R)

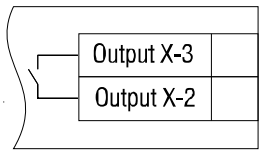

Fig. 4.9 Relay output Q1…Q4

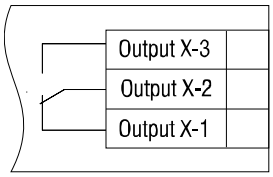

Fig. 4.10 Relay output Q5…Q8

4.5.2 NPN transistor (T)

The NPN transistor outputs are designed to control low voltage relays up to 60 V DC/ 400 mA.

► **NOTICE** ***As a precaution against inadvertent current reversal on output, a parallel diode is usually included in the output circuit.***

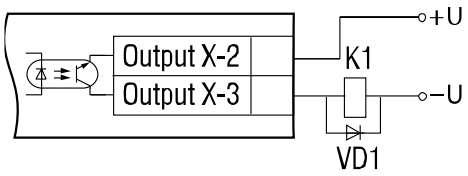

Fig. 4.11 NPN transistor outputs Q1…Q4

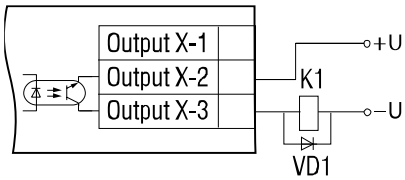

Fig. 4.12 NPN transistor outputs Q5…Q8

4.5.3 Solid state relay (S)

Logic outputs are designed to control solid state relays with rating voltage 4…6 V DC and current up to 50 mA.

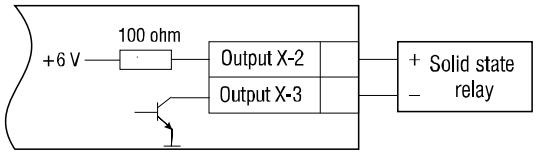

Fig. 4.13 SSR outputs Q1…Q4

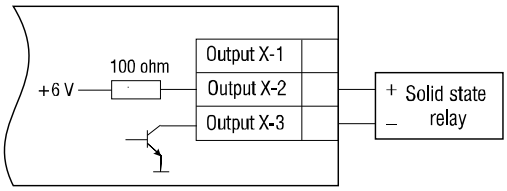

Fig. 4.14 SSR outputs Q5…Q8

4.5.4 Analog 4-20 mA (I)

An external voltage source for analog outputs is required. The voltage is calculated as follows:

$$U_{min} < U < U_{max}$$

$$U_{min} = 10\ V + 0.02\ A \times R$$

$$U_{max} = U_{min} + 2.5\ V$$

where

Umin, Umax – minimum and maximum permissible voltage, V

R – current-limiting resistor, ohm

If $U > U_{max}$ it is necessary to use the additional resistance R for current limitation. It is calculated as follows:

$$R_{min} < R < R_{max}$$

$$R_{min} = (U - U_{max}) / I_{max}$$

$$R_{max} = (U - U_{min}) / I_{max}$$

where

I_{max} – maximum output current (20 mA).

► **NOTICE** ***If an external voltage source is used, the voltage must not exceed 30 V.***

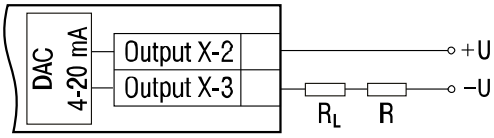

Fig. 4.15 4-20 mA outputs Q1…Q4

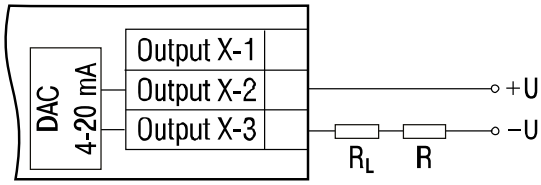

Fig. 4.16 4-20 mA outputs Q5…Q8

4.5.5 Analog 0-10 V (U)

An external voltage source for analog outputs is required.

► **NOTICE**

If an external voltage source is used, the voltage must not exceed 30 V.
The output is designed for minimal load resistance of 2 kohm.

The load resistance R should be in the range of 2…10 kohm.

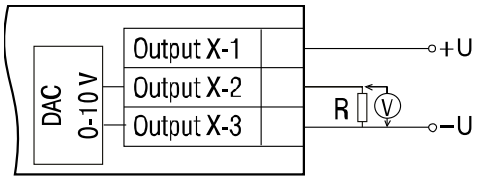

Fig. 4.17 0-10 V outputs Q5…Q8

5 Control elements

Indicators and control elements are located on the front side of the device.

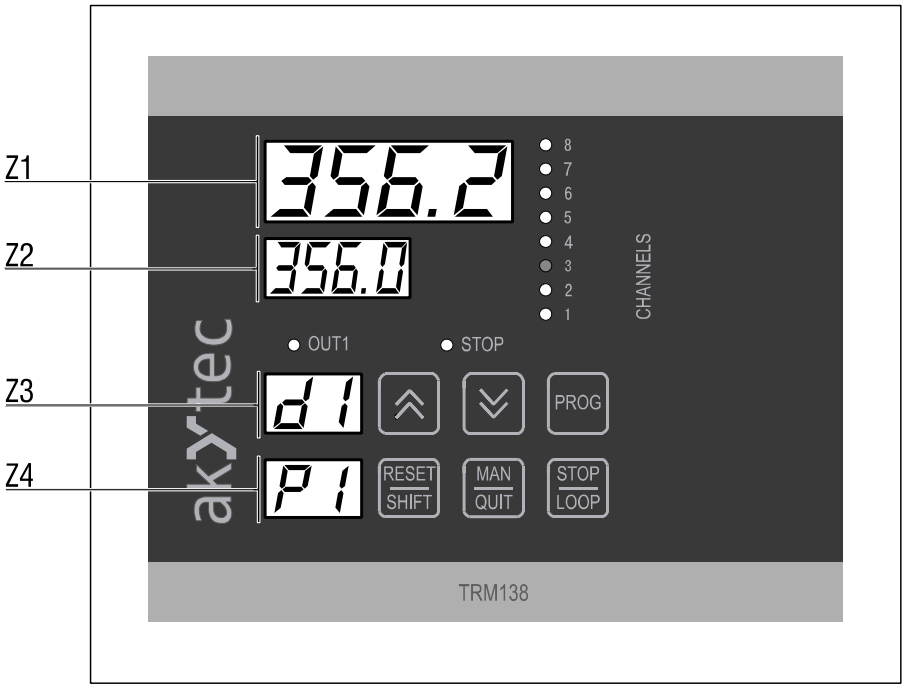

Fig. 5.1 Front view

The operation of the device can be controlled with 4 LED displays, 10 LED indicators and 6 function keys on the front panel.

Table 5.1 Displays

Display	Mode	Displayed information
Z1	Control	Measured or calculated value of the current control channel in two display modes: – Manual – displayed channel can be selected via the function keys, the corresponding LED from the group CHANNELS lights – Cyclic – channels are displayed in a loop (the period **ind.t** can be set from 1 to 600 s) In Logic Unit Measuring mode the display is blank
	Error	Number of channel with faulty sensor
Z2	Control	Setpoint for current control channel
	Error	Error code
Z3		Logic Unit input for current channel (parameter **C.in**) Blinking point after the number, if TC selected and CJC not activated
Z4		Number of the output connected to the channel (P1…P8) In Logic Unit Measuring mode - two dashes (- -) as a place holder

For display functions during configuration see section 8 Configuration.

Table 5.2 LEDs

LED	Indication	Description
CHANNEL 1…8	lights	Current control channel
	blinking	Alarm or error
OUT1	lights	Output of the current channel is ON (for digital outputs only)
STOP	lights	Manual display mode

Table 5.3 Function keys

Key	Description
⌃ ⌄	Select the current channel for display or Manual Output Control
PROG	Switch to Configuration mode
RESET / SHIFT	Disable alarm output or shift the data on the Z1 display if too long
MAN / QUIT	Switch the current channel to Manual Output Control mode or switch from Configuration to Control mode
STOP / LOOP	Switch the current channel between Manual and Cyclic display modes

6 Operation

The controller has two operating modes: Control and Configuration (see sections 7 and 8).

6.1 Block diagram

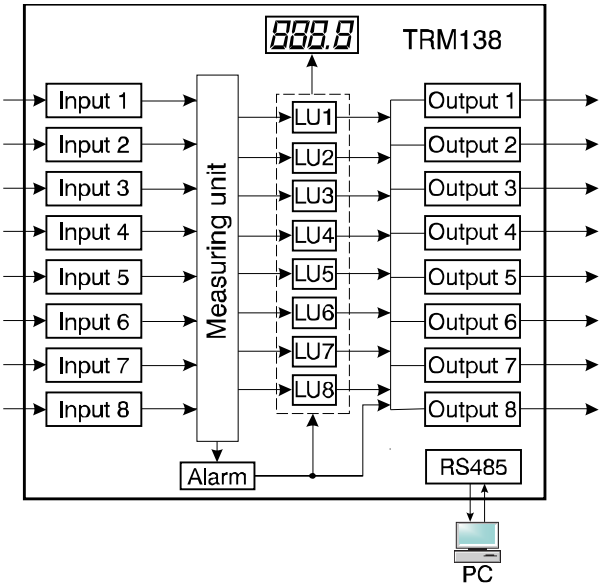

Fig. 6.1 Block diagram

An analog input signal from the resistance thermometer or thermocouple is converted according to sensor curve into a standard signal. The measured value is digitalised, analysed and processed in accordance with the set parameters. The results are saved in memory registers according to the Table C.2. For the complete parameter list refer to the Table B.1.

6.2 Input sampling

Inputs are sampled cyclically. An input is included into the sampling list when a signal type is selected in the parameter **in-t** (PL-1 group). The input is excluded from the list if the parameter **in-t** is set to OFF.

The order and the rate of sampling for each input are defined by priority which can be set as a number from 1 to 8 in the parameter **Prt** (PL-1 group). The highest priority is 8.

6.3 Cold junction compensation

The cold junction compensation provides a precise temperature measurement with thermocouples. A reference junction sensor is located near the input terminals. To enable the function set the parameter **CJ-.C** (PL-0 group) to ON. This setting is effective for all inputs.

Other filters and corrections for individual inputs are described in sections 6.4 and 6.5.

6.4 Linear scaling

To scale the linear signal (current or voltage) the measurement limits must be set. Parameters **Ain.L** “Signal lower limit” and **Ain.H** “Signal upper limit” should be set in physical units.

If **Ain.L**<**Ain.H**, then

$$Measured\ value = Ain.L + \frac{(Ain.H - Ain.L) * (S_i - S_{min})}{S_{max} - S_{min}}$$

If **Ain.L**>**Ain.H**, then

$$Measured\ value = Ain.L - \frac{(Ain.L - Ain.H) * (S_i - S_{min})}{S_{max} - S_{min}}$$

where

S_{max} – signal upper limit (for example, 20 for 4-20 mA)
S_{min} – signal lower limit (for example, 4 for 4-20 mA)
S_i – current signal value

6.5 Digital Filter

The digital filter consists of two stages.

- Comparator is used at the first stage to detect the input signals with apparent "gaps" or "outliers". For this purpose the filter bandwidth for the comparator should be specified in the parameter **in.FG** in physical units. The difference between the last two measurements is compared with the bandwidth. If the difference is greater than the bandwidth, the measurement is considered to be unreliable and must be repeated. If an unreliable result was caused by a fault, the second measurement confirms this and the first measurement value is ignored as an error. If the bandwidth is set to ‘0’, the comparator is switched off.
- Damping is used at the second stage. The filter time constant should be set in parameter **in.Fd** in seconds. The higher is the value, the higher is the noise resistance and the slower is the input response. When the value is set to ‘0’, damping is switched off.

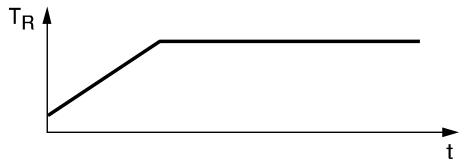

Fig. 6.2 Actual temperature T_R

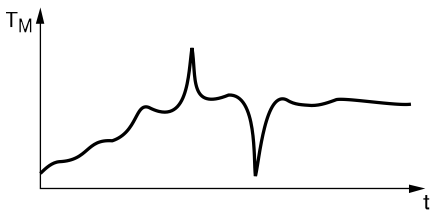

Fig. 6.3 Measured temperature T_M (filter is OFF)

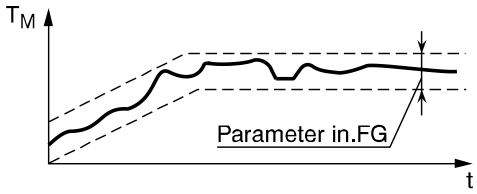

Fig. 6.4 Comparator is ON

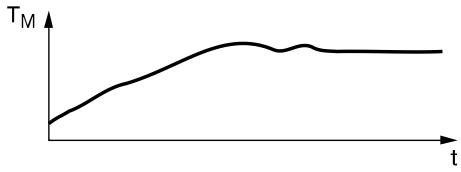

Fig. 6.5 Comparator and damping are ON

6.6 Correction

The sensor characteristic curve can be corrected by the user. Two correction parameters are provided for each input: the offset and the slope.

- Offset can be set in the parameter **in.SH** in physical units to correct the sensor initial error, for example, when you use a RTD.
- Slope can be set in the parameter **in.SL** within the range from 0.9 to 1.1.

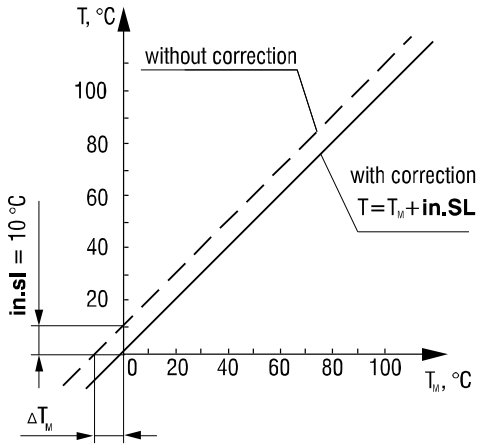

Fig. 6.6 Offset

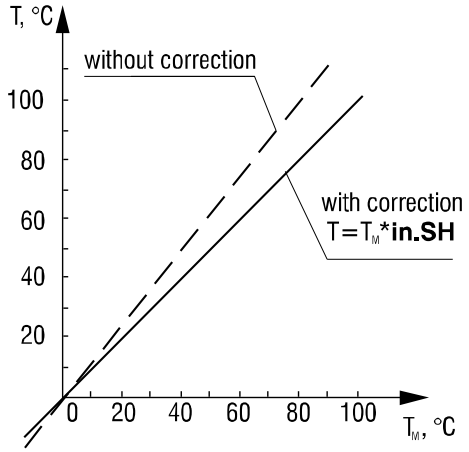

Fig. 6.7 Slope

6.7 Logic unit

The combination of a logic unit with its input parameter and connected output defines the control channel (see Fig. 6.1). Connections can be established using the function keys or the configuration tool.

The input of the logic unit can be set in the parameter **C.in** (PL-2 group).

If a value from d1 to d8 is selected, one of the device inputs is directly connected to the LU. Also an average value from 2 to 8 inputs (F1…F7), difference between 2 different inputs (A1…A4) or rate of change (units/min.) for each input (r1…r8) can be selected. If the logic unit should not be used, set the parameter **C.in** to OFF.

An additional differential filter for the LU input values r1…r8 “Rate of change” is applied. The performance of this filter can be set in the parameter **in.rd** “Differential filter time constant” (PL-1 group) for each input.

Each logic unit can be connected to one of 8 outputs, specified in the parameter **C.dr** (PL-2 group) for this LU. (for example see Table B.1, PL-3 group “Standard configurations”). Don’t forget that one output can be connected with several LUs and each of them can switch the output on (OR logic).

Each LU can work in different modes defined in the parameter **AL.t** (PL-2 group):

- Measuring (**AL.t** = 0)
- Comparator
  - Heating (**AL.t** = 1)
  - Cooling (**AL.t** = 2)
  - Alarm within limits (**AL.t** = 3)
  - Alarm outside limits (**AL.t** = 4)
- Retransmission (**AL.t** = 5).

The LU connected to the output of I or U type can work only in Measuring or Retransmission modes. In the Measuring mode the LU transmits the input signal only to the display, in the Retransmission mode – to the connected output. Control signal is not generated.

If the logic unit works in one of the comparator modes it must be connected to a digital output (R, S or T type).

6.7.1 Comparator mode

In the Comparator mode the LU compares the input signal with the setpoint considering the hysteresis value Δ and generates the output control signal. Setpoint and hysteresis values are specified in the parameters **C.SP** and **HYSt** (PL-2 group).

Output time diagrams for different comparator modes are shown in Fig. 6.8.

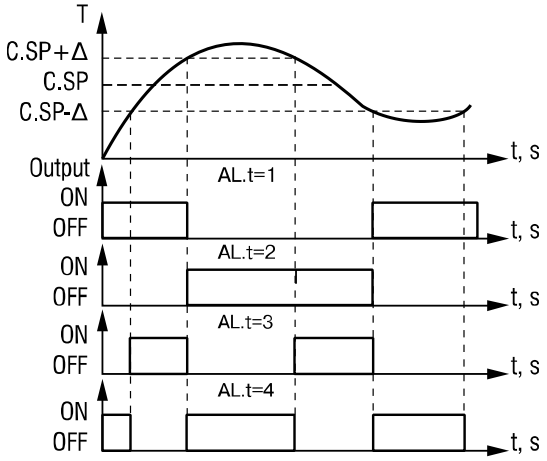

Fig. 6.8 Time diagrams for Comparator modes

Additional settings for Comparator modes:

1. If a logic unit is used in “Alarm Outside Limits” mode, it can be useful to block the first alarm, because the controlled value must not be inside the valid range when starting control. To use the option set the parameter **bL.St** (PL-2 group) to ON. Output time diagrams for this option are shown in Fig. 6.9.

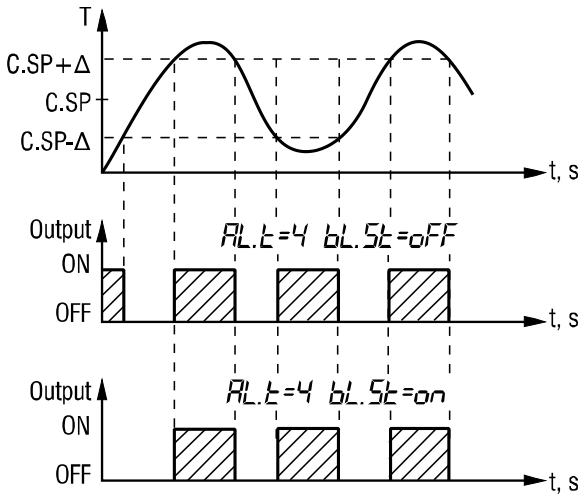

Fig. 6.9 Option “Ignore alarm on start”

2. The parameters **Ht.on** and **Ht.oF** (PL-2 group) are switch-on and switch-off delays. They can be used to protect the output element from frequent switching Output time diagram for this option is shown in Fig. 6.10.
3. Also the minimum duration of on- or off state of output irrespective of the input state can be set in the parameters **dL.on** and **dL.oF** (PL-2 group) accordingly. Output time diagram for this option is shown in Fig. 6.11.

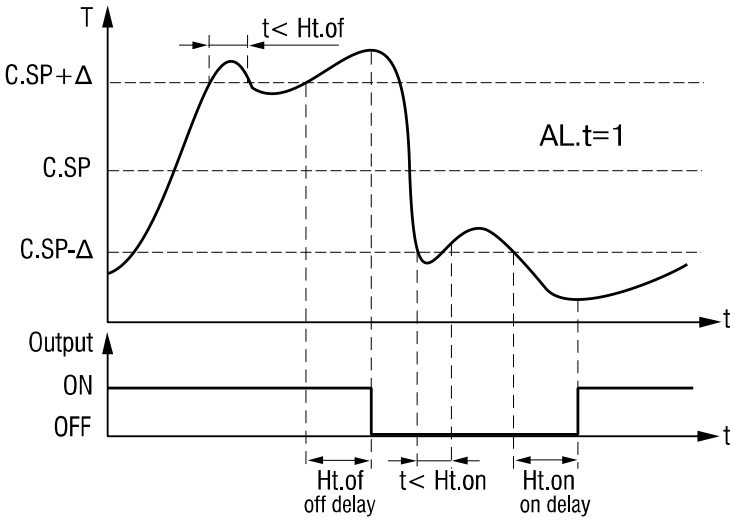

Fig. 6.10 Switch-on and switch-off delays

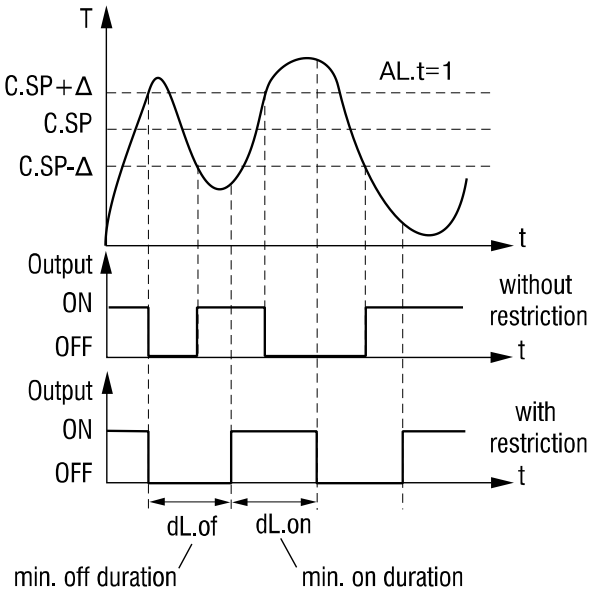

Fig. 6.11 Minimum on/off state duration

6.7.2 Retransmission mode

In the Retransmission mode the logic unit converts the input signal into proportional output signal. The conversion is made using the lower and upper limits, set in the parameters **Ao.L** and **Ao.H** (PL-2 group) accordingly. Output characteristics in the Retransmission mode are shown in Fig. 6.12.

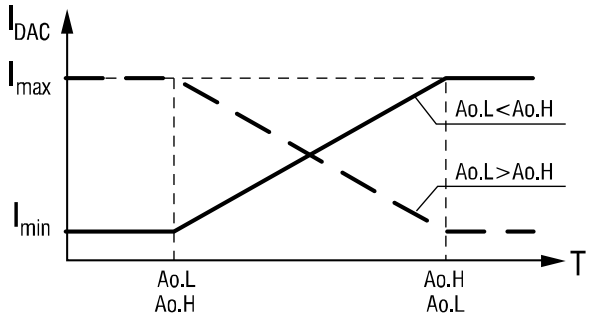

Fig. 6.12 Retransmission mode

6.8 Calibration

Calibration should be done to restore the accuracy after a long-term operation or repair works with an effect on the measurement system. Calibration has to be carried out by the manufacturer.

Contact the Technical Support of akYtec GmbH for further details.

6.9 Modbus communication

The protocols Modbus RTU / ASCII are supported. The device operates only as a Slave. Operational parameters are data which reflect the current state of the controlled system. Operational parameters can be transmitting over the Modbus network. Modbus functions to read or write parameters are shown in the Table C.1. For the complete list of operational parameters see Table C.2

7 Control mode

▶ NOTICE

Before starting
Before switching on, make sure that the device was stored at the specified ambient temperature (+1... +50 °C) for at least 30 minutes.

The Control mode is activated in 1-2 sec after powering up. In this mode the main functions can be executed (see 1.1). The firmware version of the device and the number of erroneous channel (if exists) are briefly displayed on the Z1 display. Then the measured value of the current channel is displayed. The functions of displays are described in the Table 5.1.

The output state of the control channel is changed in accordance with the set parameters. If the connected output is on, the LED OUT1 lights and the channel number is displayed on Z4.

The setpoint **C.SP** can be changed by user during operation within the range **±C.SP.o** (PL-2 group). If **C.SP** is set to 150°C and **C.SP.o** is set to 50°C, the user can change the setpoint from 100°C to 200°C without using the Configuration mode. Press PROG to activate the manual setpoint correction when the channel is displayed. Blinking of Z2 indicates that the manual setpoint correction is active.

Press ⌃ to increase and ⌄ decrease the least digit of the setpoint value by 1. Holding one of this buttons for more than 3 sec activates the ramp function. Press PROG to save the new setpoint. Z2 stops blinking if the saving is successful. New setpoint value will be used immediately after saving to non-volatile memory.

Each control channel can be switched to manual control by function keys if the parameter **bL.Ar** (PL-0) “Manual mode lock” is set to OFF.

To activate manual control press MAN QUIT. When it is active, Z4 is blinking and the output retains its state. Press ⌃ or ⌄ to switch on or off, LED OUT1 will indicate the output state.

▶ NOTICE

While the channel is in manual control mode, every command will be implemented immediately, independently from logic unit status, until the mode is cancelled. Press RESET SHIFT or STOP LOOP to cancel manual control.

▶ NOTICE

Manual control cannot be fully realized if in the configuration one output is connected to several LU. In this case each LU can switch the output. Manually disabled output will be immediately enabled by another “busy” LU.

7.1 Alarm

7.1.1 Sensor error

The device monitors the integrity of the transmitters connected to the inputs and indicates a sensor error.

7.1.2 Loop Break Alarm (LBA)

The loop break alarm is only available if the Logic unit function (parameter **AL.t**, PL-2) is set to 1 or 2 (Heating or Cooling).

With a loop break alarm, there is assumed to be an error in the control loop if the control deviation is not reduced by at least the value set in the “LBA detection band” (**C.LbA**, PL-

2) within the “LBA detection time” (**C.Lbt**, PL-2) or the direction of change does not correspond to the set control function (heating or cooling).

For example, when heating, the controlled temperature should increase after output activating and decrease after deactivating. If it is not the case, the loop break alarm will turn on.

7.1.3 Alarm handling

In the case of alarm (error) in a channel the corresponding indicator of the group “CHANNELS” starts blinking, Z1 display shows the number of this input (e.g. d - - 1) and the Z2 display shows the cause of error (see Table 7.1).
The alarm (error) persists until the cause is removed or the channel is disabled by the user. During the alarm (error) the logic unit connected to the erroneous input switches the connected output to the state (ON/OFF) defined in the parameter “Error output state” (**Er.St**, PL-2).

7.1.4 Alarm output

If an alarm signal is needed, select an output, preferably not used in other channels, and set it as an “Alarm output” in the parameter **AL.dr** (PL-0).
If an alarm or an error occurs, the alarm output is set to the “Alarm output state” (ON/OFF) defined in the parameter **AL.St** (PL-0) for the time defined in the “Alarm duration” (parameter **ALHd**, PL-0, 1…600 s). The output can be reset before this time by pressing the key MAN/QUIT. After the alarm duration time the output is reset in the previous state, but if the cause remains the alarm output will be triggered every 60 seconds for 1 second. The faulty channel can be disabled by setting the parameter **C.in** (PL-2) to OFF.

Table 7.1

Error	Z2 display
Short circuit (RTD)	0.0.0.0.
Sensor break (RTD / TC)	- - - -
Measured value below the lower limit (except 0-5 mA, 0-20 mA, 0-1 V inputs)	LLLL
Measured value above the upper limit	HHHH
Reference junction temperature too high	otCL
Measuring unit error	AdEr
Sensor disabled (**in-t** = OFF)	in.oF
LBA	LbA

7.1.5 Warning indication

In addition to the alarm, it is also possible to display a channel status change immediately, regardless of the cyclical channel displaying. When the function is active, the flashing channel LED of the "CHANNELS" group indicates that the control channel has activated its output. No alarm signal is generated. The flashing LED is switched off as soon as the output is deactivated. To activate the function, set the parameter **AL.oU** (group PL-2) for the corresponding control channel to ON.

8 Configuration

Configuration can be performed using function keys or with PC using the configuration tool “TRM138 Configurator”.

The configuration can be made individually or using standard configurations. Standard configuration schemes can be select using the parameter group PL-3. They can be also changed and saved.

System menu provides access to all parameters of operation modes, inputs, control channels, RS485 communication and access protection. The parameters are described in the Table B.1. The parameters are divided into five groups PL-0…PL-4 (see Fig. 8.1).

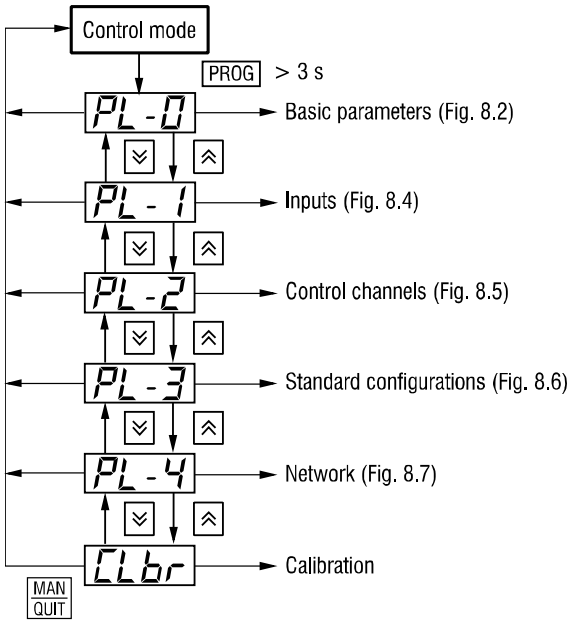

Fig. 8.1 Groups of parameters

To enter the system menu from the control mode press for at least 3 sec. the key PROG until “ProG” appears on the display Z1 and “PL-0” on the display Z2.

Select the parameter using ⌃ ⌄ keys and then press PROG.to change the parameter.

Press the MAN QUIT key to return to the upper level menu (or to the control mode).

Access protection can be set for each parameter group and is only via system menu available. Setting instruction for the access protection for the parameter group PL-0 is shown in Fig.8.2. The passcode is “-10” and cannot be changed.

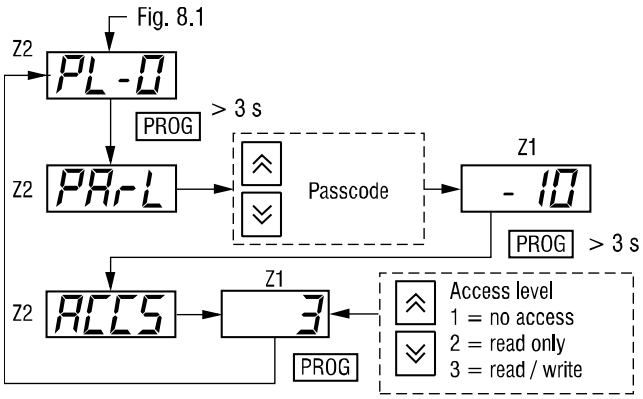

Fig 8.2 Access protection

PL-0 parameter group “Basic parameters”

Displays:

- Z1 –parameter value
- Z4 – parameter No (see Table B.1)

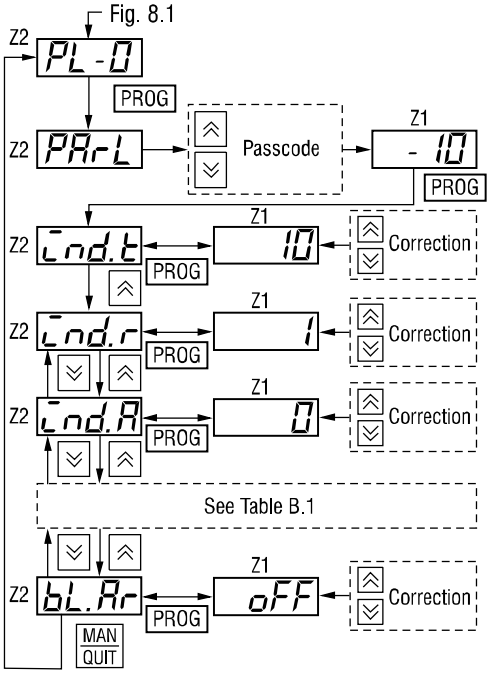

Fig. 8.3 PL-0 “Basic parameters” group

PL-1 parameter group “Inputs”

Displays:

- Z1 – parameter value
- Z3 – input No
- Z4 – parameter No (see Table B.1)

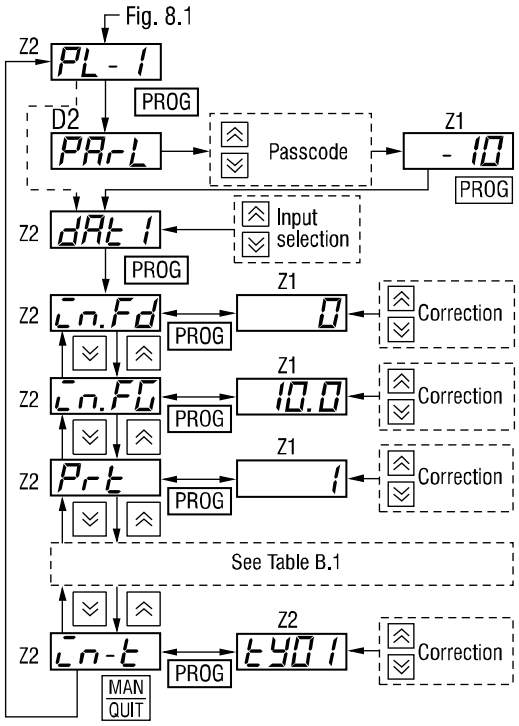

Fig. 8.4 PL-1 “Inputs” group

PL-2 parameter group “Control channels”

Displays:

- Z1 –parameter value
- Z2 – logic unit list (CPR1…CPR8 –> LU1...LU8)
- Z3 – selected logic unit (C1…C8 –> LU1…LU8)
- Z4 – parameter No (see Table B.1)

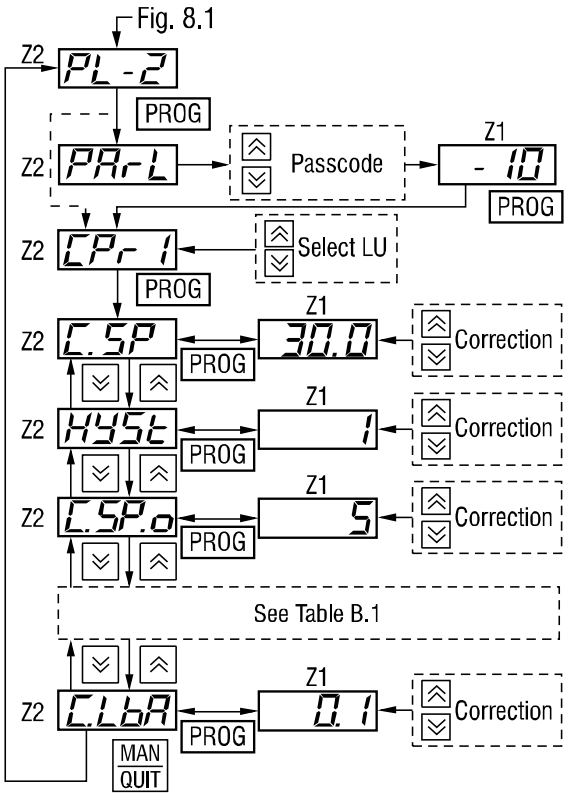

Fig. 8.5 PL-2 “Control channels” group

PL-3 parameter group “Standard configurations”

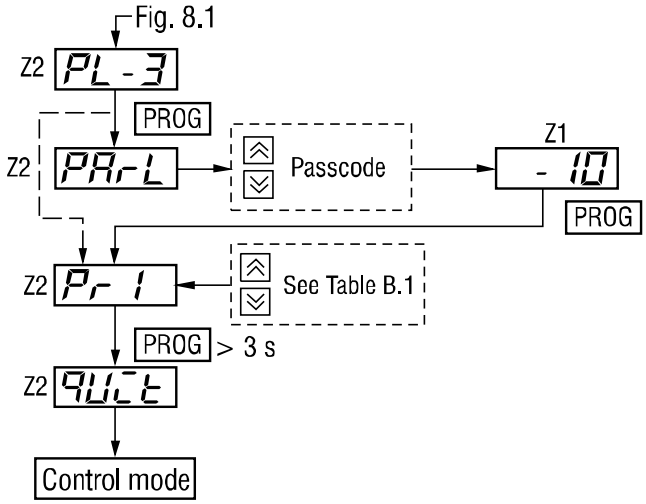

Fig. 8.6 PL-3 Standard configurations” group

PL-4 parameter group “Network”

Displays:

- Z1 –parameter value
- Z2 – parameter name

– Z4 – parameter No (see Table B.1)

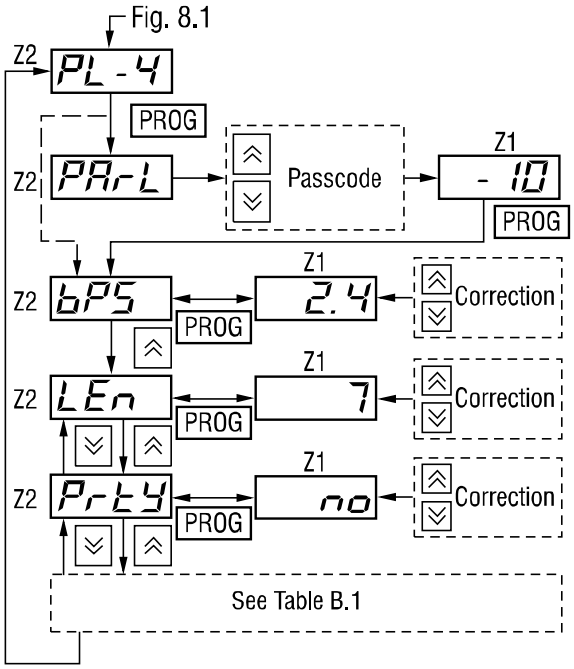

Fig. 8.7 PL-4 "Network" group

9 TRM138 Configurator

▶ NOTICE

Before starting
Before switching on, make sure that the device was stored at the specified ambient temperature (+1... +50 °C) for at least 30 minutes.

The complete list of parameters is shown in Table B.1.

The software and the manual are included on the USB stick and available for download from www.akytec.de.

The device must be configured in order to use it in RS485 network. Proceed as follows:

- install the configuration software TRM138 Configurator on the PC
- connect the device to the USB interface of the PC over USB/RS485 adapter (not included)
- connect the power supply to the terminals L / N
- turn on the device
- start the TRM138 Configurator

If the factory settings of the device have not been changed, the connection to the device is automatically established, the device automatically recognized, its configuration parameters read out and an appropriate configuration mask open.

If it does not happen, parameters of the configurator should be changed (see Table 9.1).

Table 9.1 Network factory settings

Parameter	Name	Default
Baud rate, bit/s	**bps**	9600
Data bits	**len**	8
Parity	**prty**	none
Stop bits	**sbit**	1
Address bits	**a.len**	8
Address	**addr**	16

10 Maintenance

The maintenance includes:

- cleaning of the housing and terminal blocks from dust, dirt and debris
- checking the fastening of the device
- checking the wiring (connecting leads, fastenings, mechanical damage).

The device should be cleaned with a damp cloth only. No abrasives or solvent-containing cleaners may be used. The safety information in section 3 must be observed when carrying out maintenance.

11 Transportation and storage

Pack the device in such a way as to protect it reliably against impact for storage and transportation. The original packaging provides optimum protection.

If the device is not taken immediately after delivery into operation, it must be carefully stored at a protected location. The device should not be stored in an atmosphere with chemically active substances.

Permitted storage temperature: -25...+60 °C

▶ NOTICE

Transport damage, completeness
The device may have been damaged during transportation.
Check the device for transport damage and completeness!
Report the transport damage immediately to the shipper and akYtec GmbH!

12 Scope of delivery

–	TRM138	1
–	Short guide	1
–	Mounting kit	1
–	Gasket	1
–	USB stick with software and documentation	1

Appendix A Dimensions

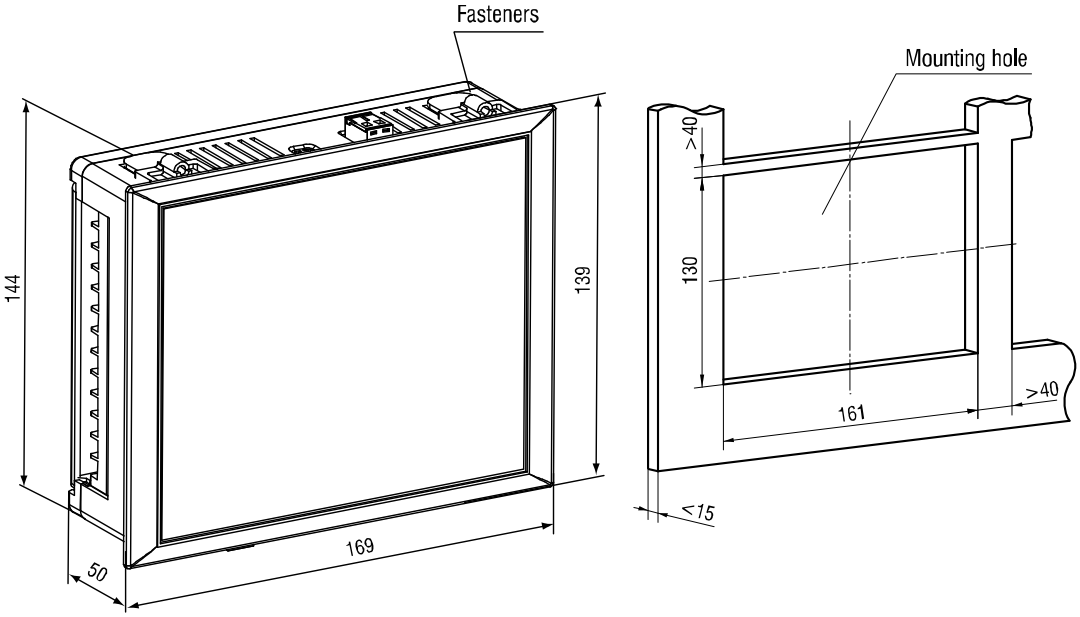

Fig. A.1 External and mounting dimensions

Appendix B Configuration parameters

Table B.1

No	Name		Parameter	Valid value	Meaning
	Config-urator	Display			
PL-0 / Basic parameters					
1	**dev**	–	Device	read only	
2	**ver**	–	Firmware	read only	
3	**n.Err**	–	Last error code	read only	
4	**ind.t**	ind.t	Channel display duration at cyclic indication (s)	1…600	
5	**ind.r**	ind.r	Display update (s)	0…60	
6	**ind.A**	ind.A	Cyclic indication after restart	ON OFF	
7	**AL.dr**	AL.dr	Alarm output	0…8	
8	**ALHd**	ALHd	Alarm duration (s)	1…600	
9	**AL.St**	AL.St	Alarm output state	ON OFF	
10	**Cj-C**	Cj-C	Cold junction compensation (CJC)	ON OFF	
11	**SYSt**	SYSt	System error indication	ON OFF	
12	**bL.Ar**	bL.Ar	Manual mode lock	ON OFF	
PL-1 / Inputs					
1	**in.Fd**	in.Fd	Filter time constant (s)	0…15	
2	**in.FG**	in.FG	Filter pass band	0…100*	
3	**Prt**	Prt	Priority	1…8	
4	**in.SH**	in.SH	Offset	-999…9999*	
5	**in.SL**	in.SL	Slope	0,900…1,100	
6	**Ain.L**	Ain.L	Signal lower limit	-999…9999*	
7	**Ain.H**	Ain.H	Signal upper limit	-999…9999*	
8	**in.rd**	in.rd	Differential filter time constant (s)	0…15	
9	**in-t**	in-t	Sensor type	oFF	OFF
				t400	RTD Cu100 (GOST)
				t401	RTD Cu50 (GOST)
				t402	RTD Pt100
				t403	RTD 100P (GOST)
				t404	TC type L (GOST)
				t405	TC type K
				t406	-50…+50mV
				t407	RTD Pt50
				t408	RTD 50P (GOST)
				t409	RTD 50M (GOST)

No	Name		Parameter	Valid value	Meaning
	Config-urator	Display			
				tY10	4…20 mA
				tY11	0…20 mA
				tY12	0…5 mA
				tY13	0…1 V
				tY14	RTD 100M (GOST)
				tY15	RTD 53M (GOST)
				tY17	TC type S
				tY18	TC type R
				tY19	TC type N
				tY20	TC type J
				tY21	TC type A-1
PL-2 / Control channels					
1	**C.SP**	C.SP	Setpoint	-999…9999*	
2	**HYSt**	HYSt	Hysteresis	0,001…9999*	
3	**C.SP.o**	C.SP.o	Manual setpoint change (±)	0…9999*	
4	**Ht.on**	Ht.on	ON-state minimum duration	0…9000	
5	**Ht.oF**	Ht.oF	OFF-state minimum duration	0…9000	
6	**dL.on**	dL.on	Turn-on delay	0…3600	
7	**dL.oF**	dL.oF	Turn-off delay	0…3600	
8	**bL.St**	bL.St	Ignore alarm on start	ON	
				OFF	
9	**AL.t**	AL.t	Logic unit function	0	Measuring mode
				1	Heating
				2	Cooling
				3	Alarm within limits
				4	Alarm outside limits
				5	Retransmission
10	**Er.St**	Er.St	Error output state	ON	
				OFF	
11	**C.in**	C.in	Logic unit input	0	OFF
				1…8	d1…d8 (input 1…8)
				9	F1 (average 1…2)
				10	F2 (average 1…3)
				11	F3 (average 1…4)
				12	F4 (average 1…5)
				13	F5 (average 1…6)
				14	F6 (average 1…7)
				15	F7 (average 1…8)
				16	A1 (difference 1-2)
				17	A2 (difference 3-4)
				18	A3 (difference 5-6)
				19	A4 (difference 7-8)
				20…27	r1…r8 (rate of change 1…8)**

No	Name		Parameter	Valid value	Meaning
	Config-urator	Display			
12	**dP**	dP	Display decimal point	0	none
				1	1 digit
				2	2 digits
				3	3 digits
13	**Ao.L**	Ao.L	Retransmission lower limit	-999…9999*	
14	**Ao.H**	Ao.H	Retransmission upper limit	-999…9999*	
15	**C.dr**	C.dr	Output No	0…8	
16	**C.Lbt**	C.Lbt	LBA detection time (s)	0…9000	
17	**C.LbA**	C.LbA	LBA detection band	0,001…100*	
18	**AL.oU**	AL.oU	Warning indicator	ON	
				OFF	
PL-3 / Standard configurations					
1	**Pr1**	Pr 1	RTD Cu50 (GOST)	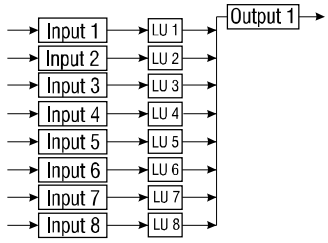	
2	**Pr2**	Pr2	RTD 100P (GOST)		
3	**Pr3**	Pr3	TC type L (GOST)		
4	**Pr4**	Pr4	4-20 mA		
5	**Pr5**	Pr5	RTD Cu50 (GOST)	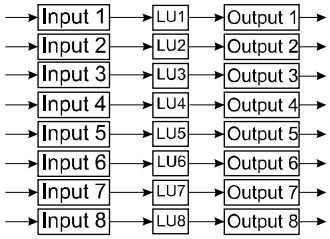	
6	**Pr6**	Pr6	RTD 100P (GOST)		
7	**Pr7**	Pr7	TC type L (GOST)		
8	**Pr8**	Pr8	4-20 mA		
9	**Pr9**	Pr9	RTD Cu50 (GOST)	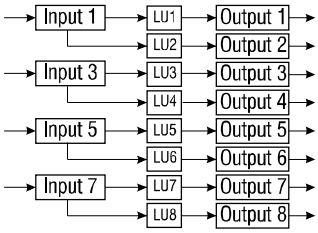	
10	**Pr10**	Pr 10	RTD 100P (GOST)		
11	**Pr11**	Pr 11	TC type L (GOST)		
12	**Pr12**	Pr 12	4-20 mA		
13	**Pr13**	Pr 13	RTD Cu50 (GOST)	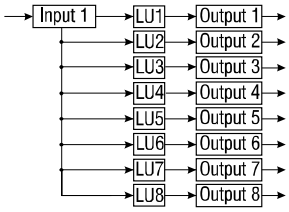	
14	**Pr14**	Pr 14	RTD Pt100	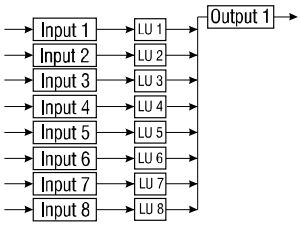	
15	**Pr15**	Pr 15	TC type K		
16	**Pr16**	Pr 16	TC type J		
17	**Pr17**	Pr 17	TC type N		

No	Name		Parameter	Valid value	Meaning
	Config-urator	Display			
18	**Pr18**	Pr 18	RTD Pt100	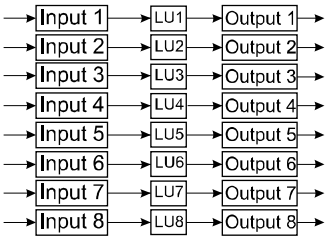	
19	**Pr19**	Pr 19	TC type K		
20	**Pr20**	Pr20	TC type J		
21	**Pr21**	Pr21	TC type N		
22	**Pr22**	Pr22	RTD Pt100	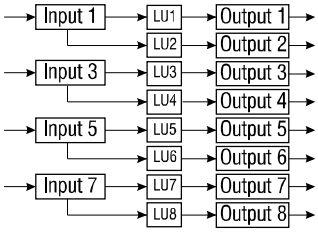	
23	**Pr23**	Pr23	TC type K		
24	**Pr24**	Pr24	TC type J		
25	**Pr25**	Pr25	TC type N		
26	**Pr26**	Pr26	RTD Pt100	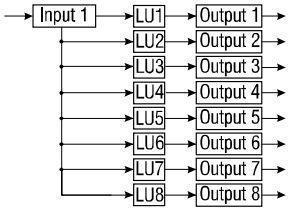	
PL-4 / Network					
1	**bPS**	bPS	Baud rate, kbit/s	0	2.4
				1	4.8
				2	9.6
				3	14.4
				4	19.2
				5	28.8
				6	38.4
				7	57.6
				8	115.2
2	**LEn**	LEn	Data bits***	0	7
				1	8
3	**PrtY**	PrtY	Parity***	0	none
				1	even
				2	odd
4	**Sbit**	Sbit	Stop bits***	0	1
				1	2
5	**A.Len**	A.LEn	Address bits	0	8
				1	11
6	**Addr**	Addr	Device address	0…2040	

** Decimal point position of this parameter can be changed.*

To change the decimal point position select the parameter (the parameter name blinks on Z2) press and hold the PROG key. The decimal point will move from left to right. Release the key on the desired position. Press the key once more to change the value.

*** Parameter is available in system menu only*

**** Invalid network parameter combinations:*

- *prty=0; sbit=0; len=0*
- *prty=1; sbit=1; len=1*
- *prty=2; sbit=1; len=1*

Appendix C Modbus addressing

Table C.1 Modbus functions

Function	Description
0x01	Read Coil Status
0x03	Read Holding Registers
0x04	Read Input Registers
0x05	Write Single Coil
0x06	Write Single Register

Table C.2 Modbus register

Parameter	Data type	Register
Function 0x04, read only		
CH1 Input value		
Decimal point	UINT16	0x0000
Value	UINT16	0x0001
Value (big-endian)	REAL32	0x0003, 0x0004
CH2 Input value		
Decimal point	UINT16	0x0005
Value	UINT16	0x0006
Value (big-endian)	REAL32	0x0008, 0x0009
…	…	…
CH8 Input value		
Decimal point	UINT16	0x0023
Value	UINT16	0x0024
Value (big-endian)	REAL32	0x0026, 0x0027
CH1 LU input value		
Decimal point	UINT16	0x0040
Value	UINT16	0x0041
Value (big-endian)	REAL32	0x0043, 0x0044
CH2 LU input value		
Decimal point	UINT16	0x0045
Value	UINT16	0x0046
Value (big-endian)	REAL32	0x0048, 0x0049
…	…	…
CH8 LU input value		
Decimal point	UINT16	0x0063
Value	UINT16	0x0064
Value (big-endian)	REAL32	0x0066, 0x0067
Function 0x03/0x06, read/write		
LU1 Input (**C.in**)	UINT16	0x0000
LU2 Input (**C.in**)	UINT16	0x0001
…	…	…
LU8 Input (**C.in**)	UINT16	0x0007
CH1 Setpoint (**C.SP**)		
Decimal point	UINT16	0x0010
Value	UINT16	0x0011
CH1 Current setpoint (**C.SP.S**)		
Decimal point	UINT16	0x0012
Value	UINT16	0x0013

Parameter	Data type	Register
CH2 Setpoint (**C.SP**)		
Decimal point	UINT16	0x0014
Value	UINT16	0x0015
CH2 Current setpoint (**C.SP.S**)		
Decimal point	UINT16	0x0016
Value	UINT16	0x0017
…	…	…
CH8 Setpoint (**C.SP**)		
Decimal point	UINT16	0x002c
Value	UINT16	0x002d
CH8 Current setpoint (**C.SP.S**)		
Decimal point	UINT16	0x002e
Value	UINT16	0x002f
CH1 Hysteresis		
Decimal point	UINT16	0x0030
Value	UINT16	0x0031
CH2 Hysteresis		
Decimal point	UINT16	0x0032
Value	UINT16	0x0033
…	…	…
CH8 Hysteresis		
Decimal point	UINT16	0x003e
Value	UINT16	0x003f
CH1 Output No (**C.dr**)	UINT16	0x0041
CH2 Output No (**C.dr**)	UINT16	0x0042
…	…	…
CH8 Output No (**C.dr**)	UINT16	0x0048
CH1 Output value (0…1000)	UINT16	0x0051
CH1 Output value (0…1000)	UINT16	0x0052
...	…	…
CH8 Output value (0…1000)	UINT16	0x0058
Function 0x01/0x05, read/write		
Output 1 state	UINT16	0x0000
Output 2 state	UINT16	0x0001
…	…	…
Output 8 state	UINT16	0x0007
Protocol akYtec activation (command)	UINT16	0xff00